HARKEN HOISTER

- 7801: 60 lb (27 kg) System
- 7802: 90 lb (41 kg) System
- 7803: 145 lb (66 kg) System
- 7806: 200 lb (91 kg) System

Harken, Inc. • 1251 E. Wisconsin Ave. • Pewaukee, WI 53072 USA • Tel: 262-691-3320 • Fax: 262-691-3008 • Email: hoister@hoister.com • Web: www.hoister.com

WARNING!: Strictly follow all instructions to avoid an accident, damage to property, personal injury or death. See www.harken.com for additional safety information.

SAVE TIME! READ THE ENTIRE MANUAL BEFORE BEGINNING HOISTER INSTALLATION.

INSTRUCTIONS

KIT INCLUDES:

A	1	Welded screw eye
B	4	Pigtail lag screws
C	1	Shackle
D	4	Pulleys
E	2	Webbing straps with buckles 7' (2.13 m)
F	1	Single black/red hoisting rope
G	1	Block and tackle with safety cleat (G1) and rope
H	4	Black drop ropes: 2 long, 2 short
I	2	Lag bolts 1/4" x 2-1/2" (6 x 63 mm)
J	2	Washers 1/4" (6 mm)
K	2	Organizer plates
L	2	Organizer pulleys

Purchase separately (if needed)

2	Pine boards (grade 2) 2" x 6" x 6' (50 mm x 152 mm x 1.83 m)
8	Lag bolts and washers 5/16" x 4" (8 x 100 mm)

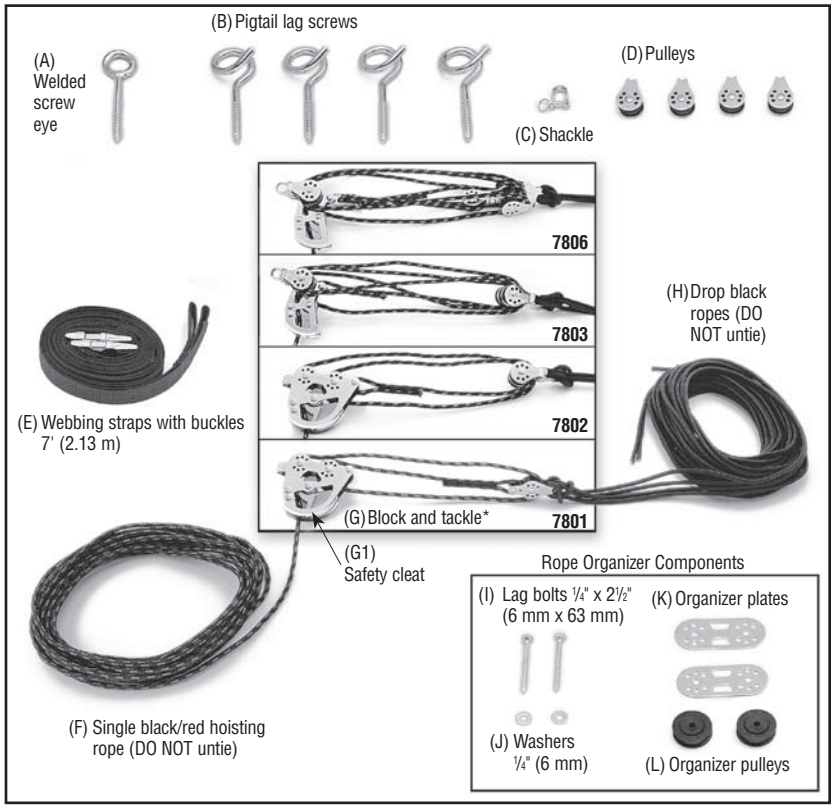

***NOTE:** (G) Block and Tackle appearance varies by system size. Refer to Hoister part number for specific Safety Cleat style.

Tools Needed:

Drill

Drill bits: 5/32" (4 mm), 7/32" (6 mm), 5/16" (8 mm)

Plumb line

Pencil

Stud finder

Stepladder

Safety glasses

Tape measure

Wrench: 7/16" (11 mm) box end or ratcheting wrench

IMPORTANT SAFETY INFORMATION

- **DISABLE AUTOMATIC GARAGE DOOR OPENER when installing, raising, or lowering Hoister.**
- **READ ENTIRE MANUAL CAREFULLY BEFORE starting installation. It will save you time.**
- **DO NOT UNTIE ANY ROPES System comes ready to install. Leave F, G and H together.**
- **DO NOT RAISE OR LOWER HOISTER with anyone standing under object.**

INSTALLATION OVERVIEW

STEP 1 DETERMINE HOISTER LOCATION

STEP 2 INSTALL MOUNTING BOARDS

STEP 3 INSTALL PIGTAIL LAG SCREWS

STEP 4 INSTALL ROPE ORGANIZER

STEP 5 ASSEMBLE HOISTER SYSTEM

STEP 6 OPERATING HOISTER SYSTEM

MAINTENANCE & WARRANTY

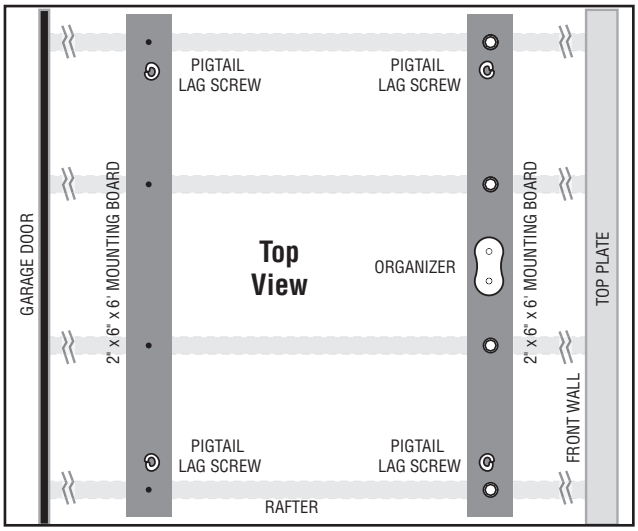

Rope Organizer

Welded Screw Eye (A)

Pigtail Lag Screw (B)

Pulleys (L)
Plates (K)
Lag Bolts (I)
Washers (J)

Pulley (D)

Front 2" x 6" Mounting Board

Back 2" x 6" Mounting Board

Long Black Drop Ropes (H)

Block and Tackle (G)

Shackle (C)

Safety Cleat (G1)

Garage Door

Webbing Straps (E)

Short Black Drop Ropes (H)

Single Red/Black Hoisting Rope (F)

Front Wall

STEP 1: DETERMINE HOISTER LOCATION

A. PLAN THE INSTALLATION

Pull car into garage with object on car rack.

Measure length of object. Position Hoister so garage door can open with object lowered.

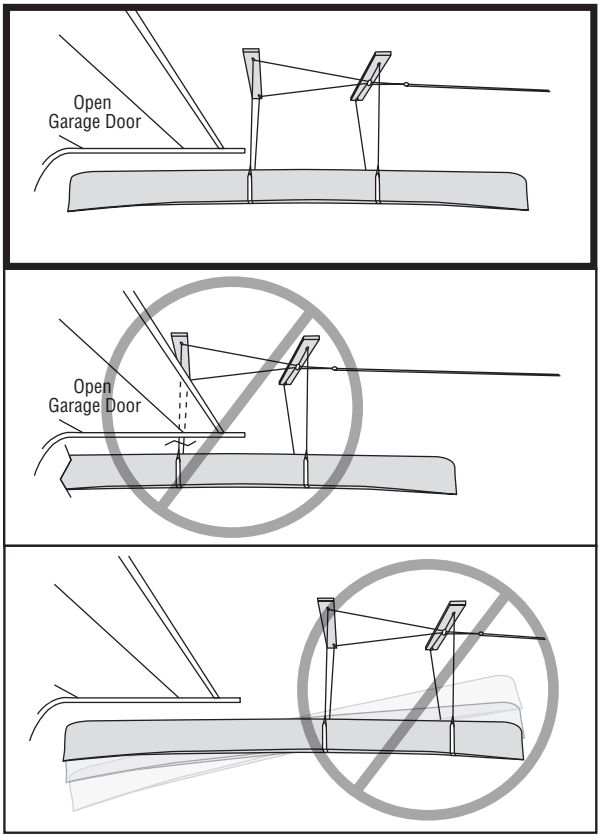

DIAGRAM 1. Position object above car with clearance to open garage door. If Hoister is mounted too close to garage door, there may not be clearance to open door. Mounted too far forward, object may not balance or lower onto car.

STORAGE OPTIONS

Measure height of object. Make sure object can be stored above or below the open garage door.

OPTION 1. Above Garage Door: Clearance to lift and store object above open garage door.

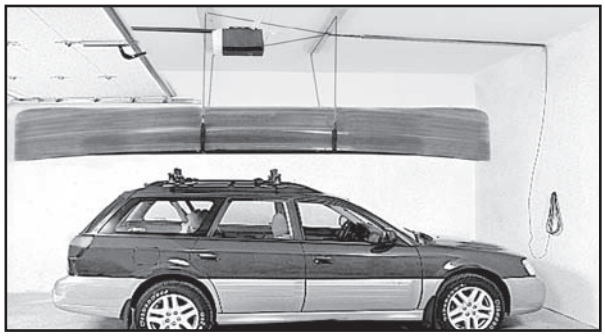

OPTION 2. Below Garage Door: Use if not enough clearance for Above Garage Door Storage (Option 1). Object has clearance to lift and store below open garage door.

B. PLAN LOCATION OF MOUNTING BOARDS

Mounting boards are used to position Hoister directly above object to be lifted.

7806 Hoister (200 lb system) requires mounting boards to span minimum three rafters.

WARNING: Do not screw into laminated rafters. They are not intended to accept fasteners. Consult rafter maker for recommendations. Screwing into laminated rafters may considerably weaken system, causing load to fall which may cause an accident, damage to property, personal injury or death.

NOTE: Mounting boards may not be necessary for installation in ceiling with exposed rafters. In ceilings with exposed rafters, system can be installed on rafters. Position Hoister directly above object to be lifted. If installing without mounting boards, go to step 3.

DISTANCE BETWEEN MOUNTING BOARDS

Distance between mounting boards should be 1/3 of object's length.

Exception: Distance between mounting boards for long canoes/sea kayaks will be less than 1/3 object's length.

Calculate distance between mounting boards using formula or chart below.

_____	x .33 =	_____
Object length	**33%**	**Mounting distance**

LOCATE CEILING MOUNTING BOARD POSITION

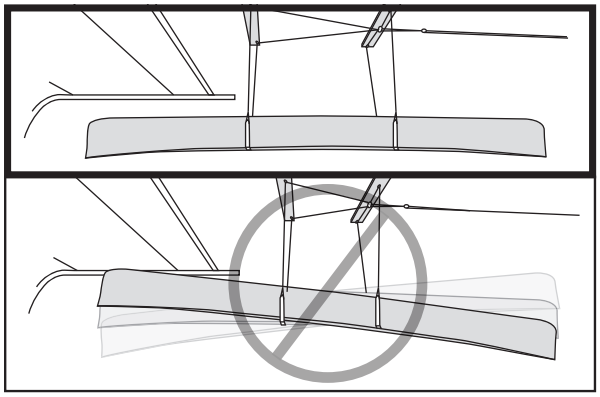

DIAGRAM 2. Center object under mounting points. Position mounting boards so lifted object is balanced.

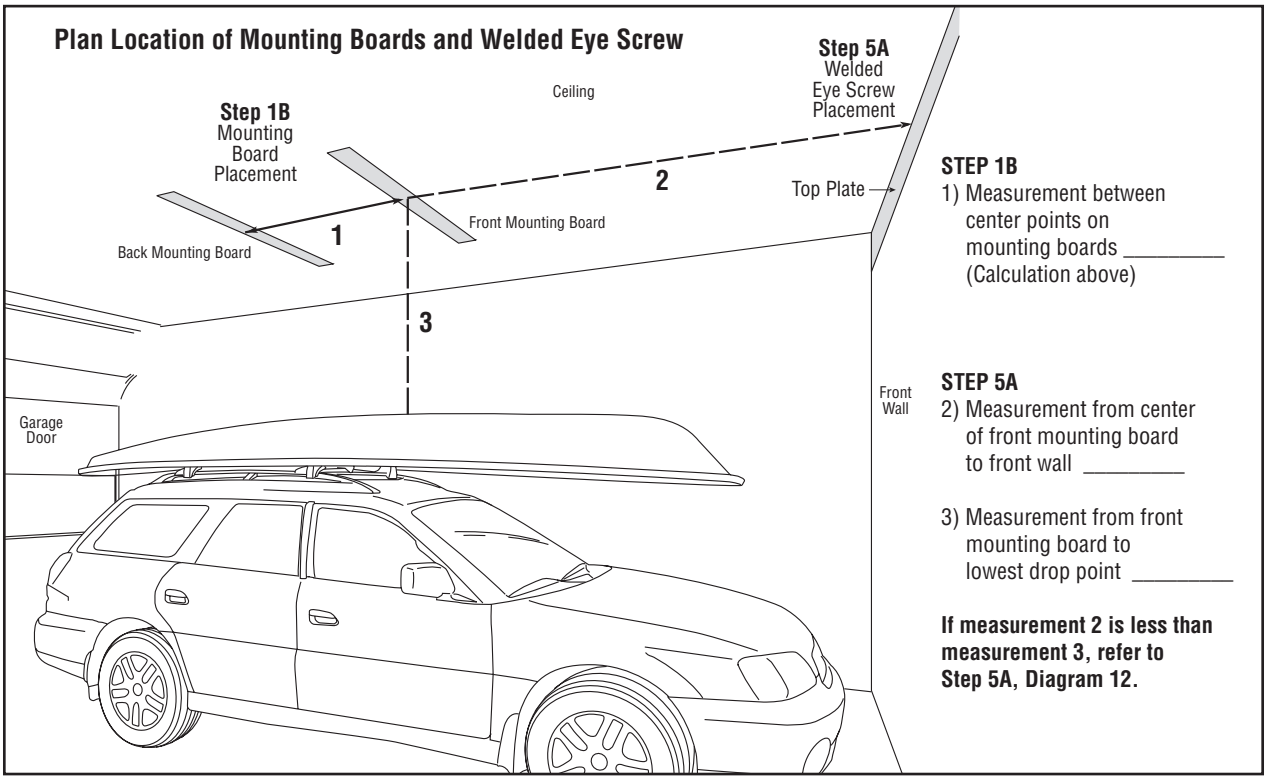

DIAGRAM 3. Distance of mounting boards from front wall is important, as it affects the position of the welded screw eye in Step 5A.

STEP 2: INSTALL MOUNTING BOARDS

A. DRILL CEILING RAFTER ATTACHMENT POINTS

LOCATE CEILING RAFTERS

Mounting boards must attach to ceiling rafters. On finished ceilings, locate rafters using stud finder. Follow manufacturer's instructions.

Mark center of ceiling rafters. Drill 7/32" (5.5 mm) holes.

B. DRILL MOUNTING BOARDS

Measure center-to-center distance between rafters. Mark distance on mounting boards. Mark drill points in the center of the board. Drill 5/16" (8 mm) holes completely through the mounting boards.

C. ATTACH MOUNTING BOARDS TO CEILING

Attach mounting boards using 5/16" (8 mm) lag bolts and washers (not included).

Do not over-tighten.

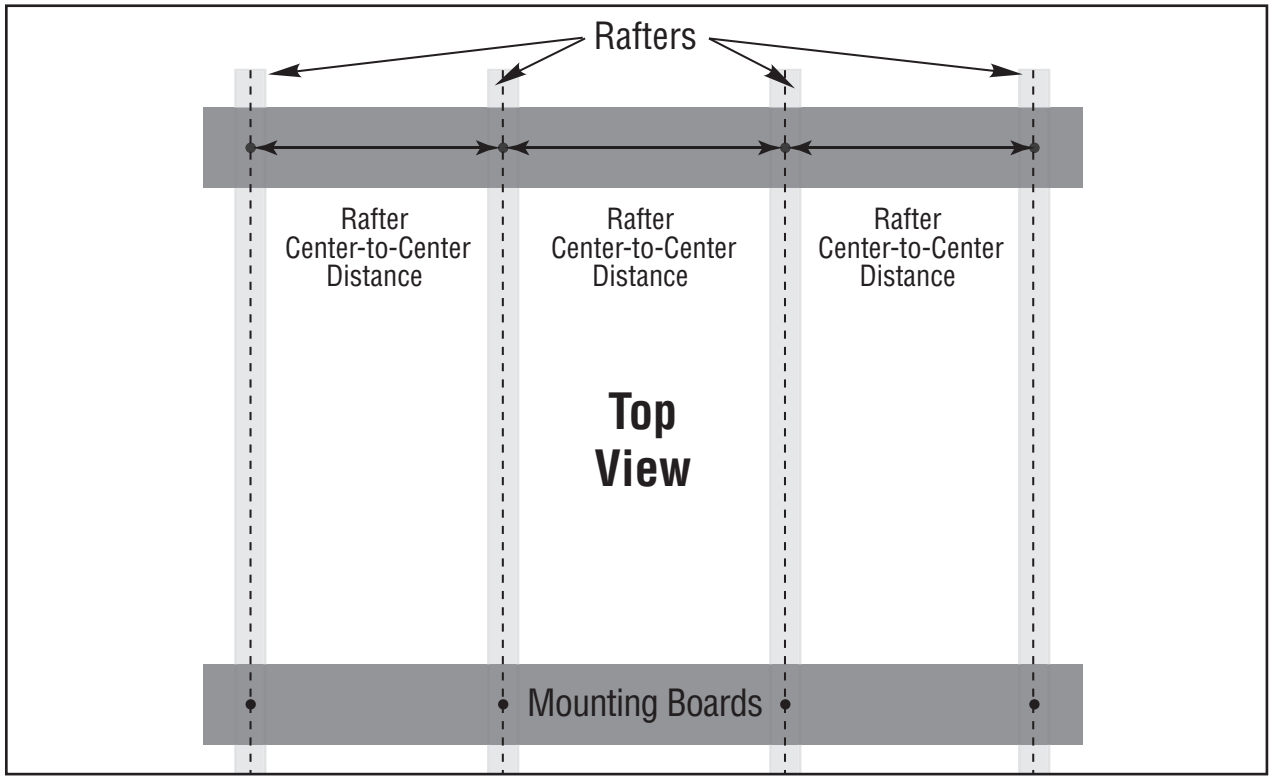

DIAGRAM 4. Mark center-to-center distance between rafters on mounting boards. Attach mounting boards to rafters.

STEP 3: INSTALL PIGTAIL LAG SCREWS

A. DETERMINE PIGTAIL LAG SCREW (B) LOCATION

PULL VEHICLE INTO GARAGE

DIAGRAM 5. Pull vehicle into garage with object on car rack. Disconnect automatic garage door.

MARK LOCATION POINTS

Use plumb line to locate four lifting points on mounting boards above vehicle.

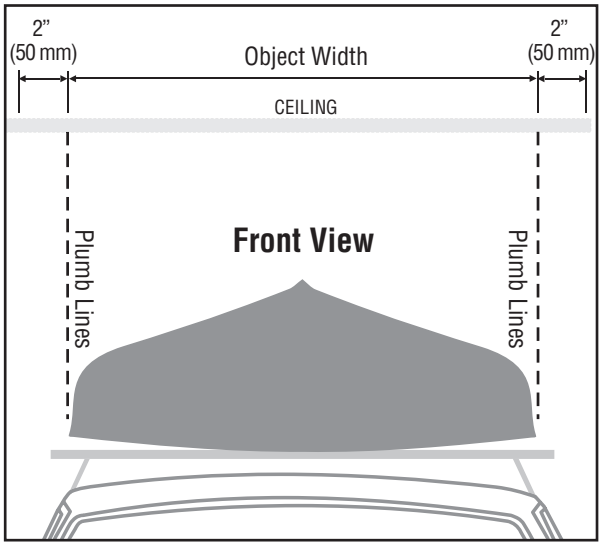

DIAGRAM 6. Mark object width on mounting boards.

DRILL 2 HOLES ON EACH MOUNTING BOARD

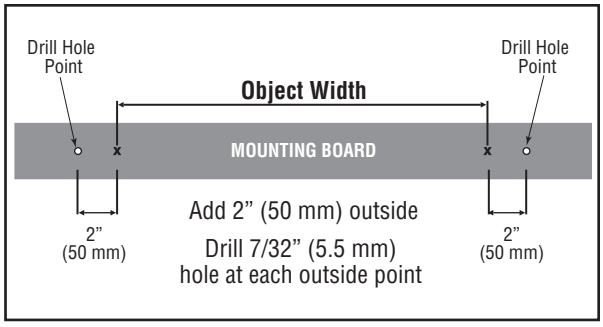

DIAGRAM 7. Add 2" (50 mm) outside each mark. Drill a 7/32" (5.5 mm) hole at each drill point on mounting boards

INSTALL PIGTAIL LAG SCREWS

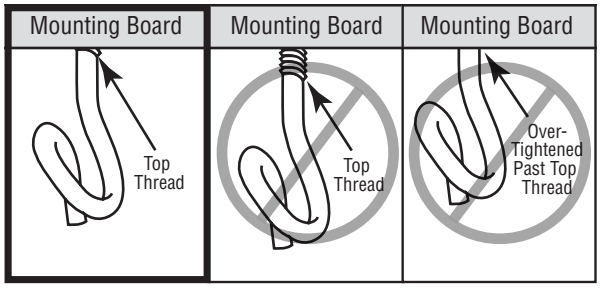

DIAGRAM 8. Install a Pigtail Lag Screw (B) in each hole. Threads should just disappear into mounting board.

WARNING: Do not over-tighten Pigtail Lag Screw past top thread. This can weaken fastener hold which may considerably weaken system, causing load to fall which may cause an accident, damage to property, personal injury or death.

STEP 4: INSTALL ROPE ORGANIZER

A. DRILL HOLES IN MOUNTING BOARD

DIAGRAM 9. Center Rope Organizer Plate (K) between the two Pigtail Lag Screws (B) on front mounting board. Use as template to mark center holes.

Drill two 5/32" (4 mm) holes.

B. ASSEMBLE ROPE ORGANIZER

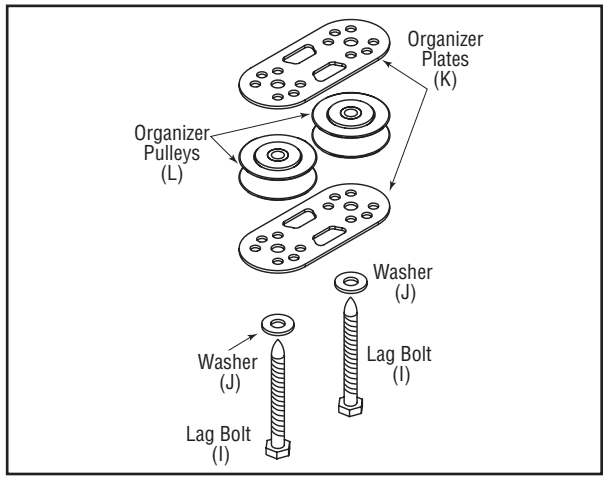

DIAGRAM 10. Assemble Rope Organizer using Plate (K) and Pulleys (L). Fasten to mounting board with Lag Bolts (I) and Washers (J).

IMPORTANT: Do not over-tighten bolts. This can keep Rope Organizer Pulleys (L) from turning properly.

STEP 5: ASSEMBLE HOISTER SYSTEM

A. INSTALL WELDED SCREW EYE (A)

PLACEMENT ON FRONT WALL

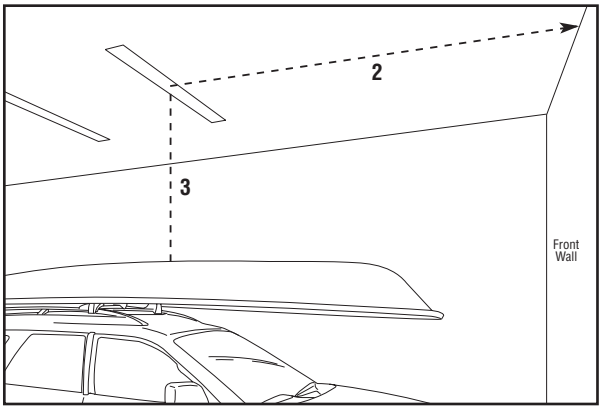

DIAGRAM 11. Distance 2 must be equal or somewhat greater than distance 3. See chart below. For a larger view, see Diagram 3.

MAXIMIZING LOWERING OF OBJECT

You may want to lower object to floor or sawhorses. If distance 2 is much greater than 3, the amount object can be lowered will be limited by length of supplied line. When distance 2 is much greater than 3, purchase longer line for drop ropes (H) to maximize distance object can be lowered.

If Distance 2 is	Distance 3 will be	If Distance 2 is	Distance 3 will be
10	10	14	6
11	9	15	5
12	8	16	4
13	7	17	3

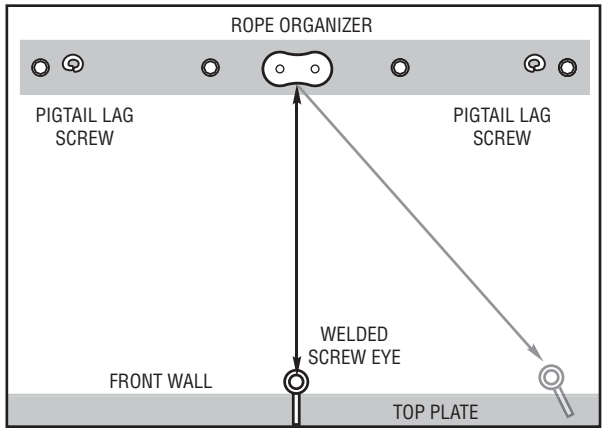

DIAGRAM 12. If distance to front wall is less than distance needed to lift object, move the Welded Screw Eye (A) along the front wall until distance 2 is equal to distance 3 (see Diagram 11).

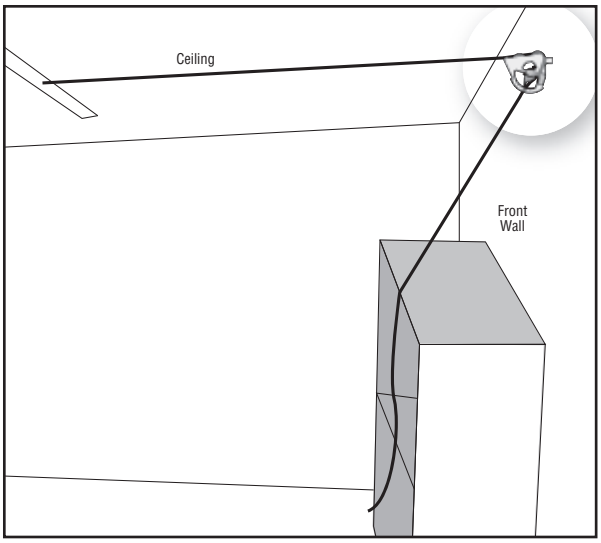

DIAGRAM 13. Avoid installing Welded Screw Eye above tall shelves. See Diagram 21 (Open).

INSTALL WELDED SCREW EYE (A) ON FRONT WALL

Use stud finder to locate solid wood of top plate. Drill 7/32" (5.5 mm) hole. Screw Welded Screw Eye (A) into top plate of front wall (near top of ceiling).

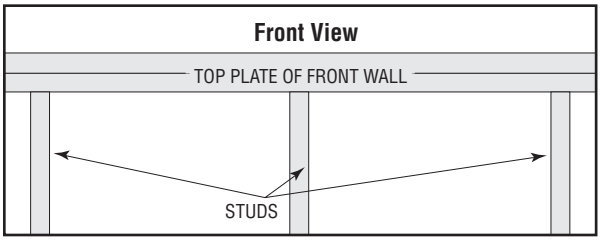

DIAGRAM 14. Top plate of front wall.

B. ATTACH PULLEYS

Place one Pulley (D) on each Pigtail Lag Screw (B).

ATTACH BLOCK AND TACKLE (G)

Attach Block and Tackle system (G) to welded Screw Eye (A) with Shackle (C). Remove ring from shackle like a key ring. Put pin through top of Safety Cleat (G1). Put ring back on to secure Shackle (C).

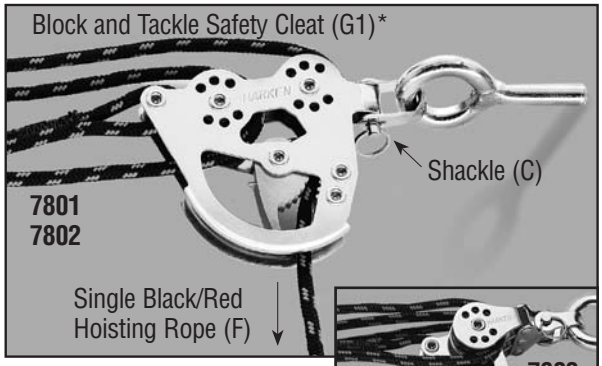

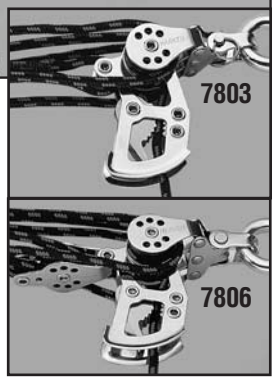

DIAGRAM 15. Single black/red hoisting rope must face down.

***NOTE:** Appearance of Safety Cleat (G1) varies by system size. Refer to system part number for specific Block and Tackle Safety Cleat.

C. INSTALL ROPE

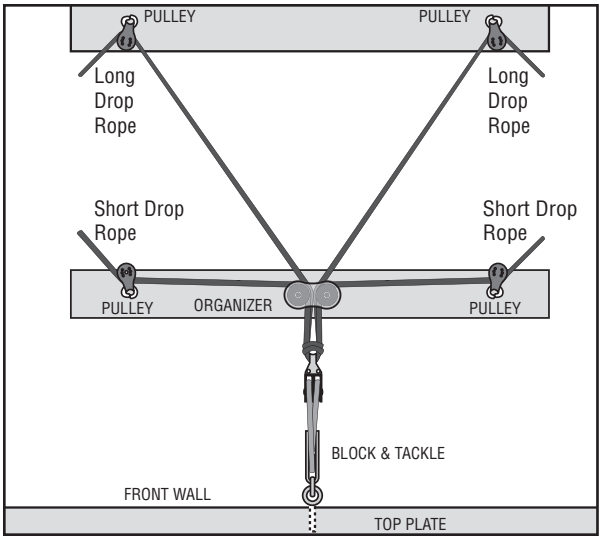

DIAGRAM 16. Put all four Black Drop Ropes through Organizer.

Put two shorter Black Drop Ropes through Pulleys (D) on mounting board with Rope Organizer.

Put two longer Black Drop Ropes through Pulleys (D) on remaining mounting board.

D. ATTACH STRAPS TO ROPE

TIE ROPE TO WEBBING STRAPS

Keep knot as close to Webbing Strap (E) eye as possible.

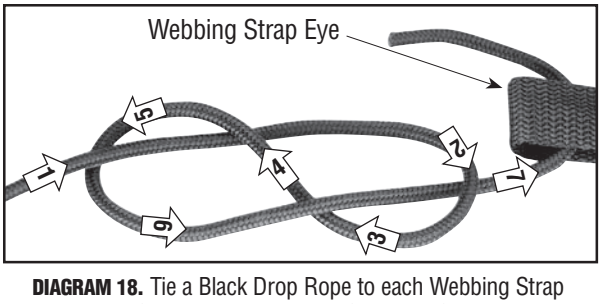

DIAGRAM 18. Tie a Black Drop Rope to each Webbing Strap (E) using a figure-eight knot. Pass free end of rope through the sewn Webbing Strap eye.

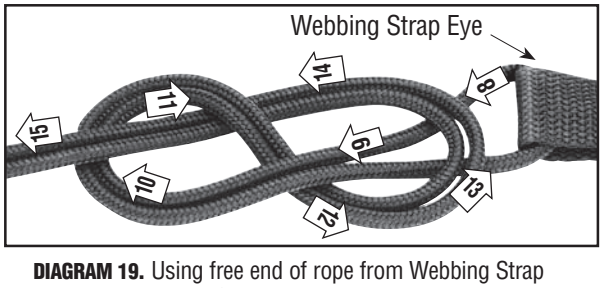

DIAGRAM 19. Using free end of rope from Webbing Strap eye, retrace original figure-eight knot in reverse. Tightly cinch all four strands of rope exiting the knot.
Tighten knots.

POSITION WEBBING STRAPS

Place object in position under system. Place Webbing Straps (E) under object to be lifted. Push buckles together to lock.

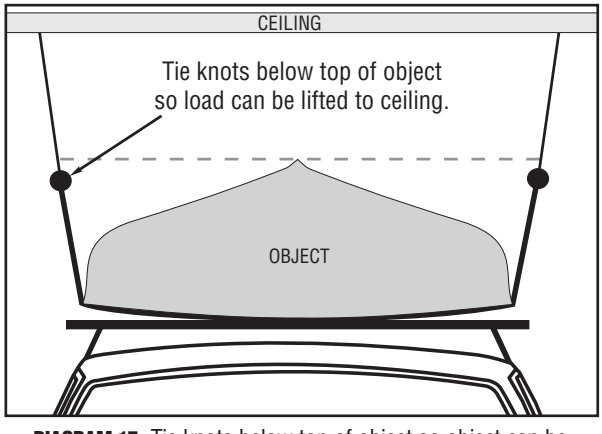

DIAGRAM 17. Tie knots below top of object so object can be lifted to ceiling.

E. ADJUSTING LIFTING SYSTEM

ALIGN SCREW EYES

DIAGRAM 20. Align Pigtail Lag Screws in direction of rope running through Pulley.

LEVEL OBJECT

All webbing straps and ropes must have equal tension to keep object level. Check by slowly pulling the Black/ Red Hoisting Rope (F).

To level object, adjust tension by moving knot or adjusting webbing strap at buckle.

STEP 6: OPERATING HOISTER SYSTEM

WARNING: Disable garage door opener when installing, raising, or lowering the Hoister. Do not raise or lower with anyone standing under object. Keep area below Hoister clear. If the load falls it may cause an accident, damage to property, personal injury or death.

A. RAISE OBJECT

Hoist in a series of pulls. Pull Single Black/Red Hoisting Rope (F) straight down.

With rope pointed down the cleat will lock the rope and you can release it. Repeat until object is at desired height.

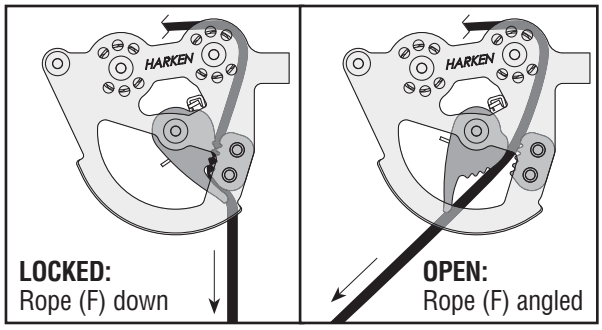

DIAGRAM 21. Locked (left): Single Black/Red Hoisting Rope (F) pointed straight down locks cleat. Open (right): Angled rope opens cleat.

WARNING: Stop pulling as soon as object contacts ceiling or webbing strap knots stop at pulley (D). Damage or injury may result from forcing the system. If in doubt, stop hoisting, allow cleat to lock by angling line down. Stand back to see if object is raised to the maximum or if something is jamming rope or object.

B. STORE OBJECT

With object in raised position make sure Single Black/Red Hoisting Rope (F) is securely locked in cleat with rope pointed down (see Diagram 21). Coil loose rope end. Hang coiled rope for storage when system is not in use.

WARNING: Hang coiled rope where it will not accidentally snag on persons or vehicle. Keep coiled rope out of reach of children. Damage or injury may result if rope is angled away from wall with some tension; the object can come down very quickly which may cause an accident, damage to property, personal injury or death.

Tip: For additional security, use two safety 5/16" (8 mm) polyester ropes. Securely tie ends to pigtail lag screws under object, parallel with Webbing Straps (E). Remove safety ropes before lowering object.

C. LOWER OBJECT

Securely grip rope, apply tension and angle it away from front wall. Bring arm up to let rope out and then back towards the wall to lock the rope. Repeat until object is at desired height.

WARNING: When operating system, make sure area below object is clear of persons. If object comes down too quickly this may cause an accident, damage to property, personal injury or death.

Tip: Use gloves to protect hands.

CAUTION: Avoid injury, do not let rope slip through hands. Angle line to wall to lock rope.

MAINTENANCE

MAINTENANCE

Inspect rope (H and F), knots and straps regularly for signs of chafe, wearing or UV damage. Replace immediately. Inspect knots for signs of slipping. When attaching object, inspect webbing strap buckles (E) to make sure spring clip functions properly. Replace rope and hardware with Harken parts only.

WARRANTY

WARRANTY

What Is Covered – This warranty covers defects in materials or workmanship.

Who Is Covered – The original purchaser.

For How Long – Harken® products are warranted for five (5) years from the date of purchase:

After the end of any specific warranty period noted above, HARKEN® MAKES NO EXPRESS OR IMPLIED WARRANTIES OF ANY KIND WITH RESPECT TO THE PRODUCTS, INCLUDING ANY WARRANTY OF MERCHANTABILITY OR FITNESS FOR A PARTICULAR PURPOSE. Some states, or if you live outside the U.S., some countries, do not allow limitations on how long an implied warranty lasts, so the above limitation may not apply to you.

What Is Not Covered – This warranty does not cover any product that was: improperly installed; inadequately inspected after installation; improperly maintained; used in any application for which it was not intended; used under load conditions exceeding the rating or other recommendation published in the Harken® catalog; or subject to misuse, negligence, accident, or unauthorized modification or repair. Ropes, buckles and webbing are also not covered. Labor charges are also not covered. Separate warranty provisions may be available from vendors on some of the above products. Contact Harken® for this warranty information.

CONSEQUENTIAL AND INCIDENTAL DAMAGES ARE NOT RECOVERABLE UNDER THIS WARRANTY. Some states do not allow the exclusion or limitation of incidental damages, so the above limitation or exclusion may not apply to you.

How To Get Service – If something goes wrong, contact Harken® directly or your local Harken® dealer to arrange for warranty assistance. Your dealer has Harken® Warranty Return Guidelines that provide you with exact return procedures depending on the product involved. We will need, in writing, your name, address, phone number, date of purchase, product involved, application, an explanation of the defect and conditions under which the product was used. We are fair and we do care when Harken® products do not perform.

3 Easy Steps

3 Store

2 Lift

1 Secure

CEILING LEVEL STORAGE

Each Hoister kit is complete and simple to install.

Easy one-person operation with a single control rope.

Self-locking safety cleat grips instantly if accidentally released.

SELECTING THE HARKEN HOISTER YOU NEED:

1. Determine maximum weight you will lift and select correct Hoister.

Part No.	Description	Mechanical advantage	Lifting Weight Min lb	Min kg	Max lb	Max kg
7801	60 lb Storage System	3:1	15	7	60	27
7802	90 lb Storage System	4:1	25	11	90	41
7803	145 lb Storage System	6:1	45	20	145	66
7806	200 lb Storage System	8:1	75	34	200	91

2. Standard Hoisters are designed for an 10' (3 m) ceiling. Contact Harken for taller ceilings.

3. Check distance between ceiling and top of garage door in open position. Will object fit in this space? If not, will object lift and store under garage door in open position? If not, consider turning the object 90° and placing in the front of garage.

4. Hoisters 7801, 7802 and 7803 are designed to lift an object no wider than 5' (1.52 m). System 7806 = 6' (1.83 m).

Tools Needed: Drill, Drill bits: 5/32" (4 mm), 7/32" (6 mm), 5/16" (8 mm), Plumb line, Pencil, Stud finder, Stepladder, Safety glasses, Tape measure, Wrench: 7/16" (11 mm) box end or ratcheting wrench. **Optional Supplies:** Two 2" x 6" x 6' grade 2 pine boards (50 mm x 152 mm x 1.83 m), Eight 5/16" x 4" (8 x 100 mm) lag bolts and washers.

Harken, Inc. • 1251 E. Wisconsin Ave. • Pewaukee, WI 53072 USA • Tel: 262-691-3320
Fax: 262-691-3008 • Email: hoister@hoister.com • Web: www.hoister.com

4907/4-07 Printed in USA